CC BY SA

Recibido 13/5/2025
Aceptado 18/8/2025
https://doi.org/10.22320/07196466.2025.43.068.04

Felipe Loureiro
Doctorado em Engenharia de Produção,
Investigador de posdoctorado, Laboratório
Tecnologias, Diálogos e Sítios, Programa de
Engenharia de Produção da COPPE
Universidade Federal do Rio de Janeiro
Rio de Janeiro, Brasil
https://orcid.org/0000-0003-4515-0304
loureiro.fgsf@gmail.com

Roberto Bartholo
Doctorado em Engenharia Industrial,
Coordinador, Laboratório Tecnologias,
Diálogos e Sítios, Programa de Engenharia de
Produção da COPPE
Universidade Federal do Rio de Janeiro
Rio de Janeiro, Brasil
https://orcid.org/0000-0003-2258-2198
bartholo.roberto@gmail.com

ARQUITETURA E TRABALHO: UMA ANÁLISE FLUSSERIANA, DOS MOSTEIROS MEDIEVAIS ÀS SMART CITIES

ARCHITECTURE AND WORK: A FLUSSERIAN ANALYSIS, FROM MEDIEVAL MONASTERIES TO SMART CITIES

ARQUITECTURA Y TRABAJO: UN ANÁLISIS FLUSSERIANO, DE LOS MONASTERIOS MEDIEVALES A LAS SMART CITIES

Figure 0. Washington office, c.1904.
Source: Burke, 1946.

Fundação de Amparo à Pesquisa do Estado do Rio de Janeiro (FAPERJ) - Conselho Nacional de Desenvolvimento Científico e Tecnológico (CNPq)

AS / Vol 43 / Nº 68 / 2025
ISSN Impresa 0716-2677
ISSN Digital 0719-6466

RESUMO

O artigo parte de duas referências teóricas – as reflexões do filósofo Vilém Flusser acerca da natureza do trabalho e os conceitos de espaço e lugar desenvolvidos pelo geógrafo Yi-Fu Tuan – para analisar três tipos de espaços de trabalho: os mosteiros medievais, as fábricas da Era Industrial e os escritórios contemporâneos. Segundo Flusser, "Para poder trabalhar é necessário supor que o mundo não é como deveria ser e que se pode transformá-lo". A arquitetura – desde o processo de concepção até a construção – pressupõe um tipo de trabalho que transforma o mundo de maneira concreta, articulando as dimensões descritas por Tuan como espaço mítico, espaço pragmático e espaço geométrico. O cruzamento da abordagem flusseriana com os conceitos de Tuan revela aspectos estruturais das relações entre os edifícios e as culturas que neles se expressam e se apoiam, indicando possíveis caminhos para a interpretação do papel da arquitetura em um mundo dominado por aparelhos.

Palavras-chave: espaços de trabalho, escritórios, fábricas, mosteiros, teoria da arquitetura

ABSTRACT

The paper draws from two theoretical references – philosopher Vilém Flusser's reflections on the nature of work and the concepts of space and place developed by geographer Yi-Fu Tuan – to analyse three types of workspaces: medieval monasteries, industrial-age factories, and contemporary offices. According to Flusser, "To be able to work, it is necessary to suppose that the world is not as it should be and that it can be transformed", and architecture – from the process of conception to construction – presupposes a type of work that transforms the world in a very concrete way, articulating the dimensions described by Tuan as a mythical space, pragmatic space, and geometric space. The intersection between the Flusserian approach and Tuan's concepts reveals some structural aspects of the relationships between buildings and the cultures they express and support, indicating possible paths for interpreting the role of architecture in a world dominated by devices.

Keywords: workspaces, offices, factories, monasteries, architectural theory

RESUMEN

El artículo parte de dos referencias teóricas – las reflexiones del filósofo Vilém Flusser sobre la naturaleza del trabajo y los conceptos de espacio y lugar desarrollados por el geógrafo Yi-Fu Tuan – para analizar tres tipos de espacios de trabajo: los monasterios medievales, las fábricas de la era industrial y las oficinas contemporáneas. Según Flusser, "para poder trabajar, es necesario suponer que el mundo no es como debería ser y que se puede transformar", y la arquitectura – desde el proceso de concepción hasta la construcción – presupone un tipo de trabajo que transforma el mundo de una manera muy concreta, articulando las dimensiones descritas por Tuan como espacio mítico, espacio pragmático y espacio geométrico. La intersección del enfoque Flusseriano con los conceptos de Tuan revela algunos aspectos estructurales de las relaciones entre los edificios y las culturas que ellos expresan y apoyan, indicando posibles caminos para la interpretación del papel de la arquitectura en un mundo dominado por los aparatos.

Palabras clave: espacios de trabajo, oficinas, fábricas, monasterios, teoría de la arquitectura

AS / Vol 43 / Nº 68 / 2025
ISSN Impresa 0716-2677
ISSN Digital 0719-6466

INTRODUCTION

This article begins by identifying the tension between the immateriality of an increasingly digitized culture and the architecture's inherent materiality, a tension that becomes particularly evident in recent transformations in the configuration and design of workspaces. Even though many people carry out work activities using networks of interconnected devices, cities continue to suffer from the problems caused by the daily flow of people commuting between their homes and offices, shops, and factories. To better understand this contradiction, the article draws on Vilém Flusser's reflections on the nature of work, articulating them to the concepts of space and place developed by Yi-Fu Tuan in the analysis of three historical models of workspaces.

Vilém Flusser (1920-1991) was born into a family of Jewish intellectuals in Prague, where he studied philosophy for only two semesters – training interrupted by the Nazi threat, which led him to flee first to England and then to Brazil, where he lived for more than 30 years. In São Paulo, Flusser joined the local intellectual circles, developed his thinking, and published his first books. With the hardening of the military dictatorship in Brazil, he returned to Europe in 1972 – initially residing in Italy and later settling in Robion, France. From the 1980s, his work began to gain widespread dissemination in Europe. In November 1991, Flusser died in a car accident after giving a lecture at the Goethe-Institut in Prague. His intellectual production, marked by a non-academic spirit, is recognized mainly by the idea that the internal logic of the means of communication that predominate in the production and distribution of a given culture shapes the worldview of that culture. In his most famous example, Flusser argues that historical consciousness is the product of a culture based on linear texts and that the notion of history is being overcome by the emergence of "technical images" generated by "devices".

Yi-Fu Tuan (1930-2022) was born in Tianjin, China, completed his university education in the United Kingdom, and later settled in the United States, where he played a leading role in consolidating and expanding the field of humanistic geography. By studying the cultural and psychological roots of the different types of relationship that can be established with space, Tuan systematized the fundamental concepts of "space" – understood as an "undifferentiated" extension susceptible to exploitation or appropriation – and "place" – understood as a "portion" of space demarcated and recognized by the attribution of meaning by individuals and/or groups.

Although these two authors are widely recognized in their fields, where Flusser's influence, initially limited by the fact that most of his texts were written in Portuguese and German, has been amplified by recent translations into English, unfortunately, both seem to have had little direct impact in the area of architecture. This article aims to explore the fruitfulness of certain concepts developed by Flusser and Tuan, reflecting on the relationships between the architectural form of workspaces and the social and relational dynamics prevalent in specific historical periods.

AS / Vol 43 / Nº 68 / 2025
ISSN Impresa 0716-2677
ISSN Digital 0719-6466

The idea of this reflection arose from the reading of the text "Beyond the Machines" (Flusser, 2012), where the author presents three historical models of work: "that of the engaged revolutionary, that of the research scientist, and that of the technocratic employee". Based on this reading, we identified three historical models of workspaces that could be related to Flusser's models: the medieval monastery, the factory, and the office. Next, we analyze the relationship of each of these models with the conceptions of space and place formulated by Tuan, understood as always "situated" and, therefore, variable according to the dominant ontologies in each culture and in each period. We believe that this analysis can reveal some structural aspects of the relationships between buildings and the cultures that are expressed and supported in them, pointing out possible ways to interpret the role of architecture in the contemporary context.

THEORETICAL FRAMEWORK

WORK, ACCORDING TO FLUSSER

For Flusser, the transition from agricultural to industrial society brought about not only a social or economic revolution, but above all an ontological revolution. The ontology of the peasant, who "patiently" worked with nature, was replaced by the ontology of the engineer, who "violently" shapes nature. However, by the late 1970s, Flusser had identified another transition: the industrial world, designed by engineers and built by workers, was beginning to give way to a post-industrial world programmed by programmers and operated by employees.

This succession of ontologies -peasant, engineer, employee – may seem overly synthetic, since it assumes that the entire pre-industrial period would have been a very long era shaped by the logic of agriculture. However, although this model groups together periods as complex and diverse as antiquity and the Middle Ages, what really distinguishes each of these ontologies is the difference between "the view of an animated cosmos" and the "scientific view of the world". Flusser recognizes that "in agricultural society there were artisans, and in industrial society there were peasants", but stresses that "the agricultural blacksmith hammered according to an animated cosmos, and the industrial peasant milked according to an inanimate cosmos" (Flusser, 2011b, p.48). Likewise, in both periods, there were already employees or administrators who worked according to the prevailing worldviews in each era. Thus, the transition to the ontology of the employee may only seem like a redistribution of labor within the industrial age: the automation of production and the growth of corporations would have increased the demand for administrative employees, who came to be more numerous than workers. However, the cosmos of the employee is no longer the same as that of the engineer – both are inanimate, but the first obeys the logic of projects, while the second follows the logic of programs.

AS / Vol 43 / Nº 68 / 2025
ISSN Impresa 0716-2677
ISSN Digital 0719-6466

Although they lived in ontologically very distinct periods, pre-industrial peasants and factory workers worked with "things" – cows, wheat, wood, iron – whether they were animate or inanimate, as their respective cosmos. Now the employee works not with things, but with symbols – such as texts, numbers, tables, and so on. Of course, many people already worked with symbols in previous eras, but not in the same way. For the monk in charge of the accounting of the monastery, those numbers corresponded to exchanges, things, or agreements that took place in the concrete world, which for him was still an animated cosmos; for the employee, the document is the concrete fact. The monk-accountant did not live according to the logic of the accounting balance sheet. However, the employee lives according to the managerial logic that demands and consumes their spreadsheets and reports. These documents also refer, for the most part, to concrete things – but for the employee, they are concrete themselves. So much so that the work of managers often consists more in controlling the documents that record the activities of the organization rather than in controlling the activities themselves. The management of documents that theoretically record the results of work has become more important than the management of the work itself.

This transformation leads us to reflect on the nature of work, which, especially in industrial and post-industrial contexts, forces us to consider the question of technique. An in-depth reflection on technique is undoubtedly beyond the pretensions of this article. However, it is worth mentioning that Heidegger – who exercised a significant influence on Flusser's thought- points out that the "apparent neutrality of technique" stimulated the search for the realization of "all the possibilities of technique," extending its domains in the direction "of technically conquering nature and technically organizing history, in order to create an international institution which, fabricated by man, must assume the prosperity or well-being of man" (Martin Heidegger em Vietta, 1993, pp. 152-153; Rüdiger, 2014, p.10). Even though we can say that the technique was already present in the world of the peasant, not only in agricultural practices, but also in techniques linked to artisanal production and the arts in general, its internal logic was inserted in a broader worldview, which included and exceeded it. In the age of the worker, however, the technique became a worldview in itself.

In *O Universo das Imagens Técnicas*, Flusser presents a model of the history of culture – perhaps an attempt to organize history technically? - which consists of five steps or degrees towards abstraction. A predominant form of cultural organization marks each step: initially, immersed in nature, the human being could only express and transmit knowledge through their actions; then, through the manipulation of natural materials, objects arise, which perpetuate actions – informing nature and giving rise to culture; the next step is the emergence of images that represented or symbolized objects, serving as models for future actions; then, however, these images become more important than the objects themselves - Flusser calls them "traditional images", whose predominance would be replaced around four thousand years ago, with the emergence of writing, which "explained" the images;

AS / Vol 43 / Nº 68 / 2025
ISSN Impresa 0716-2677
ISSN Digital 0719-6466

finally, more recently, the predominance of texts and their linear and causal structure collapsed – "the pebbles of the necklaces begin to roll, loose from the rotten threads, and form chaotic heaps of particles, of much, of many bits, of zero–dimensional points" (Flusser, 2008, p.17). These "pebbles "cannot be seen, manipulated, or described, but they can be calculated by devices such as photographic cameras, television sets, and computers – devices that generate" technical images," the predominant means of organizing contemporary culture.

This model suggests a linear process in which the human being would be constantly moving away from direct experience of the world. Flusser himself, however, points out that "it was certainly not so, linearly, that man withdrew, became alienated, from the concrete world" (Ibid., p. 18): the steps symbolize distinct worlds, created and shaped by different cultural forms. The fifth step, shaped by the predominance of technical images, would correspond to a new, dimensionless level, called "post-history" (Flusser, 2008). The term arises from the realization that the linear logic of writing engendered the notion of history and that the predominance of technical images -not linear, but rather more two-dimensional- marks, therefore, the end of this history. Today, the logic of linear writing no longer applies to how we experience culture, and this experience influences people's perception of reality in its entirety. As Soto Calderón underlines, Flusser understands "that we find ourselves in a cultural crisis comparable only to the passage from oral culture to written culture, a crisis that requires us to think in new categories, since traditional episteme and modern critique are no longer operative for our current situation" (Soto Calderón, 2023) **1**.

Crossing the model of cultural history with the model of dominant ontologies, it becomes clear that the ontology of the peasant has maintained its predominance despite the transformations that have occurred in the forms of construction and expression of culture. We can say that objects, images, and texts have been created, over centuries, from the same general attitude: the "patient manipulation of animated nature." It is only in the industrial age, already under the predominance of linear writing, that this attitude is replaced– or, at least, relegated to the background. This rupture will be discussed below, based on the description made by Flusser of the type of work typical of each ontology.

According to Flusser, "to be able to work it is necessary to assume that the world is not as it should be and that it can be transformed" (Flusser, 1998, p.9). This premise leads to the development of three distinct approaches: ontology, which deals with how the world is; deontology, which deals with how the world should be; and methodology, which seeks to transform it. For Flusser, history "can be understood as a development of this tripartite division" (Ibid.), also structured in three phases: in the first – antiquity and the Middle Ages –, "interest is concentrated on the target of work, the 'must-be' of the world" (Flusser, 2012); in the second – the Modern Age –, "some people focus on the being of the world that reveals itself under work. Thus arises epistemological, scientific, experimental, 'faithless' work, in short: one

1 Original quote: *Flusser argues that we are in a cultural crisis comparable only to the passage from oral culture to written culture, a crisis that requires thinking in new categories, since the traditional episteme and modern critique are no longer operative for our current situation.* Translation by the author.

AS / Vol 43 / Nº 68 / 2025
ISSN Impresa 0716-2677
ISSN Digital 0719-6466

also works theoretically "(Ibid.); in the third – our post-industrial world – "interest is always more concentrated on the work method and the work tends to be its own purpose. Functional, technical, programmed work emerges" (Ibid.).

In each phase, one type of question predominates: in the first, it is the final questions (for what?); in the second, causal questions (why?); and in the third, formal questions (how?). Each type of question expresses a way of dealing with values, which, although they belong to deontology, are always necessarily linked to both an ontology, which they intend to preserve or modify, and a methodology, elaborated so that concepts encoded in values can act on the world and transform it. This is the function of work, which does not seek "to satisfy a biological need, but to realize a coded value, a 'must-be' inserted on a given scale. Because work is natural movement, but coded gesture (culture)" (Flusser, 2012).

However, it is important to emphasize the fundamental distinction between the machines – devices typical of the Modern Era – and the devices that characterize the post-industrial era. The arrow and the plow are machines, "objects made to overcome the resistance that the world puts to work" (Ibid.), effective in performing tasks, but incapable of questioning whether or not such tasks should be performed. With the appearance of devices, machines become problematic: they "serve the discovery, and not the modification, of the world" (Ibid.) – the telescope allows you to see the moon, but does not intend to transform it. Unlike the machine, the device is not "between the world to be worked and the man who works it", because "the world to be worked passes beyond the horizon, becomes 'metaphysical', that is, a thing in itself" (Ibid.). The machine must work so that, through it, man can change the world; in the case of the device, it is man who works according to the worldview that it offers him, or imposes.

The devices caused, therefore, an imbalance in the interrelationships between ontology, deontology, and methodology, since they are "results of the concentration of interest on the methodological aspect, the 'how' of the work process. (...) The technique, which is not possible without ontology and deontology, nevertheless devoured both ontology and deontology" (Ibid.). Ontology and deontology have come to be shaped by methodology. Thus, we run the risk of producing increasingly more sophisticated and efficient methods for creating things, without clarity about their real utility, their underlying values, or the world where they will be inserted.

SPACE ACCORDING TO TUAN

Yi-Fu Tuan defines a place as "an object in which one can dwell" (Tuan, 2013, p.22). Although associated with space, the *place* is also a pause in time, a humanized space that can take the form of a house, a neighborhood, a homeland, and so on. The *space,* in contrast, refers to freedom, to the world that we imagine to be "out there", open to exploration – and that can be classified into three types: mythical space, pragmatic space, and abstract (or theoretical) space. Mythical space has two dimensions: one that projects beyond the pragmatic space of everyday life – encompassing both what we vaguely know and what we do not

AS / Vol 43 / Nº 68 / 2025
ISSN Impresa 0716-2677
ISSN Digital 0719-6466

know and, therefore, can only imagine –; and another that corresponds to the spatiality of a worldview. Tuan underscores the role of architecture in the articulation and expression of this second dimension, loaded with symbolism and anchored in places that configure an image of the world and "inform" men about it: "first man creates the circle, be it the plane of a Native tent or the ring for the warrior dance, and after that he can discern circles and cyclic processes anywhere in nature" (Ibid., p. 138).

In modern societies, this instructive function of architecture has been almost completely abolished. Pragmatic space – understood only as a resource or support for human activities, such as "belts of poor or rich soil" (Tuan, 2013, p.27) – and conceptual or abstract space – understood in geometric terms, such as area and length- predominated. Moreover, just as space can only be known in time, there is also a mythical time, which unfolds in three dimensions: cosmogonic time – "the history of origins, including the creation of the universe" (Ibid., p. 162); human time – the linear sequence formed by the birth, life, and death of each individual; and astronomical time – the "rhythms" of nature. The first two types of time are linear and unidirectional; the latter, however, is cyclic.

According to Tuan, modern societies have either abandoned or fought against the notion of mythical space by replacing images that expressed time as an oscillating pendulum or a circular orbit – cyclic time – with the synthetic and unappealing image of time as linear, arrow-like time (Tuan, 2013, p. 152). This substitution began gradually during the Renaissance and consolidated in the routine of industrial cities, profoundly transforming human activity in space. According to Titus Burckhardt (2004), several pre-industrial cultures used similar procedures for the location and orientation of sacred buildings: based on astronomical observations with different degrees of sophistication, the quadrature of the solar cycle was traced, symbolizing the divine action in the world through the concretization, in the architectural form, of the transition from the circle -divine– to the square –terrestrial (Hani, 1981, p.33). In the context of industrial and post-industrial societies, such an operation seems absurd. Our buildings no longer fit into a mythical space: they are limited to occupying portions of pragmatic space, defined by urban zoning, the real estate market, and construction techniques, and of abstract space, constructed by maps and architectural drawings. The places people inhabit in everyday life become points in a flow that is linear in time, but cyclical in space: home, work, home. Looking back, the way in which this structure expresses and preserves a very particular worldview – and one that is perhaps in crisis- can be seen.

DEVELOPMENT

MIDDLE AGES: DEONTOLOGY, ETHICAL WORK, SYMBOLIC ARCHITECTURE

The rule of St. Benedict, written in the sixth century, established parameters for all aspects of monastic life –from the administration of the granaries to the way the monks should sleep– by articulating different

AS / Vol 43 / N° 68 / 2025
ISSN Impresa 0716-2677
ISSN Digital 0719-6466

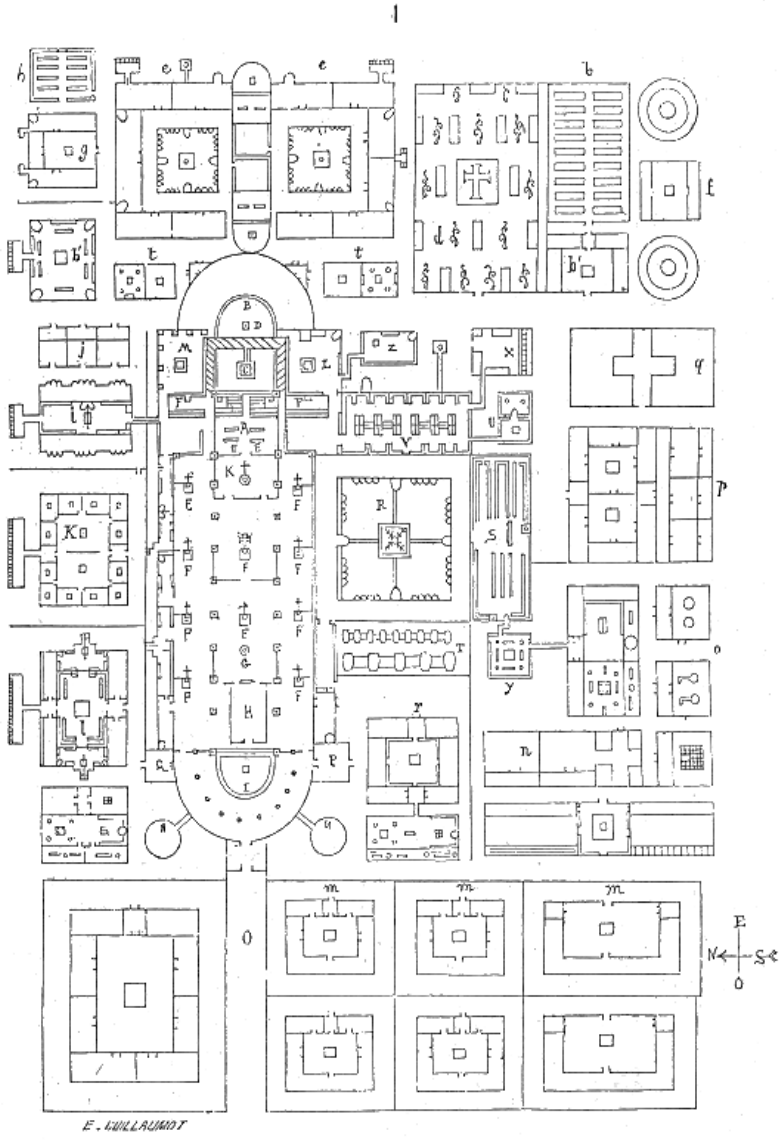

Figure 1. Simplified version of the general plan of an "ideal monastery" (Abbey of Saint-Gall), originally from the ninth century. Version published in Dictionnaire raisonné de l'architecture française du XIe au XVIe siècle, by Eugène Viollet-Le-Duc in 1856. Source: Guillaumot, 2005.

temporalities: the routine of work varied according to the liturgical calendar, which cyclically repeated an already known series of events. The form of the monasteries was structured according to the three types of space identified by Tuan, as seen in a ninth-century plan illustrating an "ideal" monastery (Figure 1). The layout of the buildings was based on the church, whose entrance faced East —the direction of the Rising Sun, traditionally understood as a symbol of resurrection (Duby & Aries, 1988). On the right, there were spaces for spiritual activities, intellectual work, and the accommodation of members of the community who needed the protection of "the right hand of God", such as novices and the sick; on the left, there were spaces for material functions - refectory, kitchen, work spaces, etc.

The model uses a 40-foot module, a number associated with several biblical episodes, such as the 40 days of the flood and the 40 years in the desert (Kostof, 1995) –reinforcing how geometry (abstract space) could materialize a worldview (mythical space) by creating symbolic forms capable

AS / Vol 43 / Nº 68 / 2025
ISSN Impresa 0716-2677
ISSN Digital 0719-6466

of translating "transcendental" spatial concepts into a concrete presence. As the rule determined that monasteries should be self-sufficient, their deployment was conditioned on the availability of water and arable land (pragmatic space) (Stoddard, 1972). Only in a space endowed with these resources would it be possible to constitute a place that symbolizes the world created by God, functioning as an antechamber and prefiguration of paradise on Earth (Duby & Aries, 1988, p.55) – that is, a deontological model. The monastery, in its form and functioning, represented what the world should be.

The form of the monastery simultaneously expressed an ontology –the Christian Worldview–, a deontology –the conception of how the earthly world should be– and a methodology -living in the monastery, according to the precepts of the Rule, would allow the individual to become what every human being should be.

In a famous lecture, Frank Lloyd Wright stated that, until the 15th century, architecture was the primary form of recording humanity. This condition was gradually weakened and eventually overcome by the diffusion of what he identified as the first machine: the book. For Wright, before Gutenberg, architecture was "the universal writing of humanity" (Wright, 1992, p.60). Interestingly, it was precisely a writer, Victor Hugo, in *The Hunchback of Notre Dame*, who perhaps expressed more incisively the impact of the book on the role of architecture in Western culture: "The little things end up with the big ones. (...) the book will kill the building!"(Hugo, 2013, p.274). Wright's reading is not limited, however, to the fact that many buildings literally "tell stories" through their iconography. For him, architecture is a means of communication for the simple fact that its material presence is capable of transmitting cultural values through generations (Goldberger, 2009, pp. 32-34).

This communicative dimension of architecture seems to have been suppressed by the functional pragmatism of industrial buildings, conceived as shelters for machines and, in a way, as machines themselves. However, as will be seen below, the attempt to deprive architecture of any communicative or symbolic intention can never be fully realized. What actually changes is only what is sought to symbolize, even if unconsciously. If the monastery symbolized the world of the peasant, who worked in consonance *with* nature, the factory would represent the world of the worker, who works, to a certain extent, *against* nature.

INDUSTRIAL REVOLUTION: ONTOLOGY, SCIENTIFIC WORK, PRAGMATIC ARCHITECTURE

The scientific mindset that led to the development of industry focused on understanding the natural world and was therefore shaped by "why" questions. However, the factory is pure methodology: the ontology created by the scientific mentality manifests itself, apparently, in a strictly pragmatic way, without explicit symbolic intention. While the presence of the church

AS / Vol 43 / N° 68 / 2025
ISSN Impresa 0716-2677
ISSN Digital 0719-6466

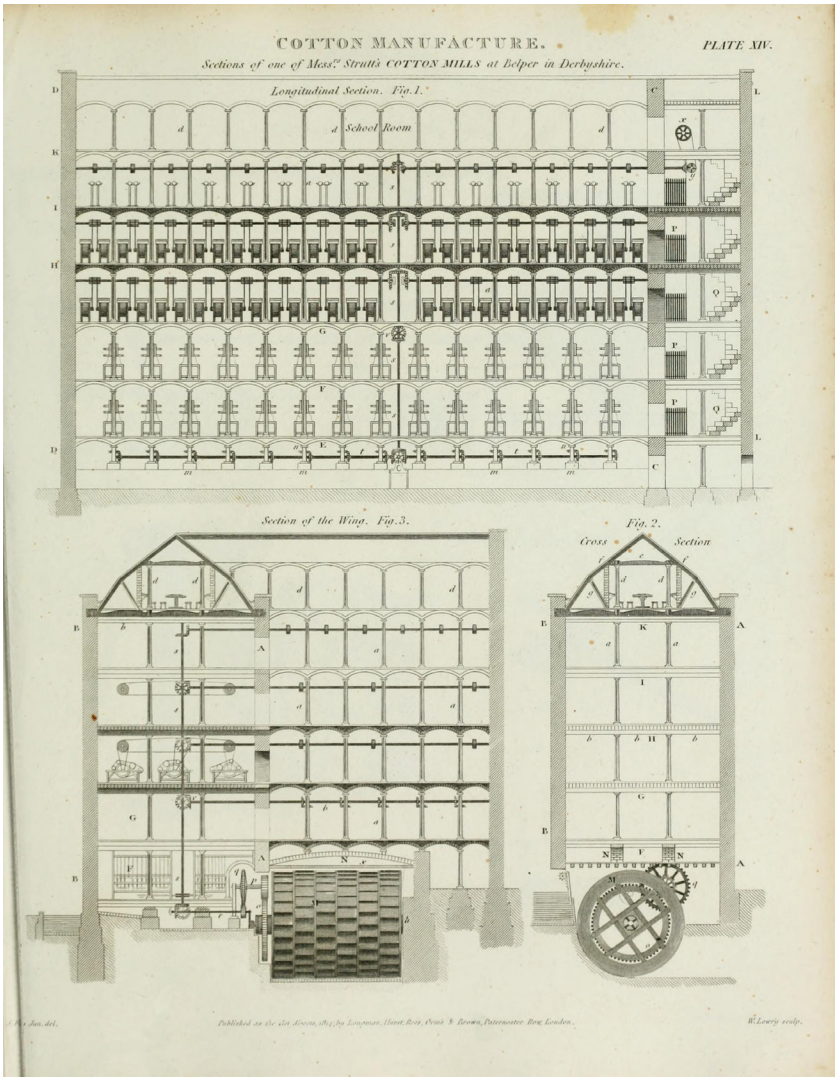

Figure 2. Diagram of a monastery at Belper, Derbyshire, England, 1819. Source: Strutt, 1819.

"multiplies" the presence of Christ –preserved and renewed with each Eucharistic ritual– the presence of the factory seeks only to ensure the permanence of the machines, guaranteeing the continuity of production (Figure 2). In the factory, deontology becomes irrelevant: if it is possible to produce a certain number of screws in a specific time interval, they will be produced, regardless of any project or purpose aimed at "transforming the world".

According to Flusser, pre-industrial man worked with tools, concretizing through them the presence of the culture in which he was immersed. He is "no longer in the world as his own home, as was the case, for example, with prehistoric man who used his hands. It is alienated from the world, protected and imprisoned by culture" (Flusser, 2007, p.37). In this relationship, the human being was the constant and the tool, the variable: the artisan could resort to different instruments at their disposal. With the insertion of the machines, however, an inversion occurs: the machines become the constant and the human being, the variable. If a tool breaks, the craftsman replaces it and continues working; if a machine breaks, work ceases; but if the operator

AS / Vol 43 / N° 68 / 2025
ISSN Impresa 0716-2677
ISSN Digital 0719-6466

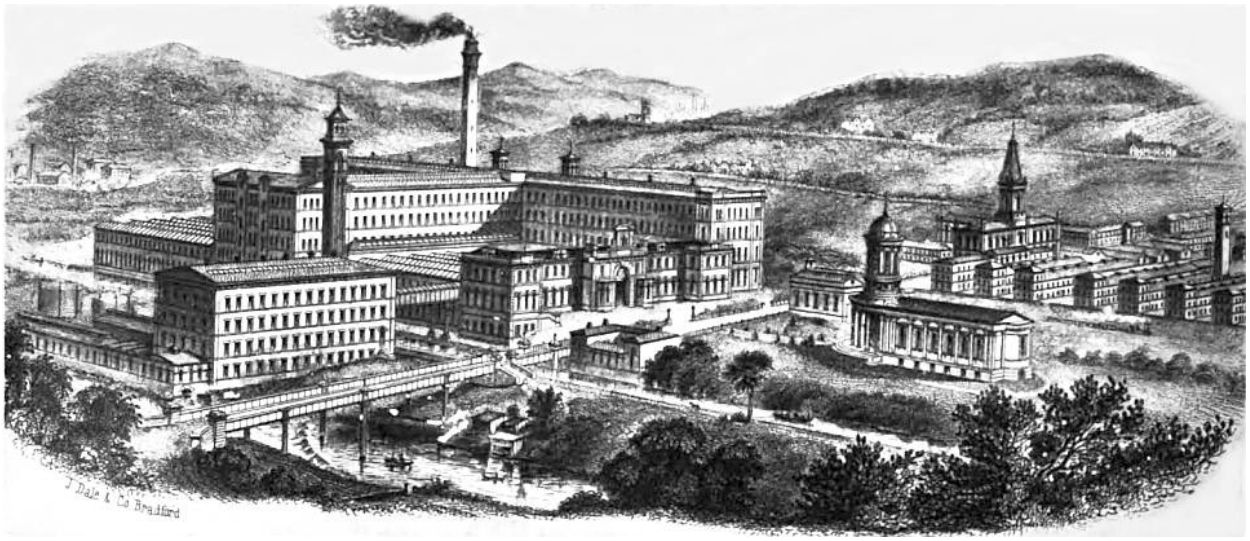

Figure 3. 19th-century drawing illustrating the village of Saltaire with the mill in the background. Source: Dale and Bradford, 1853.

"breaks," he can easily be replaced by another. Man thus ceases to surround himself with tools; it is the machine that men surround.

This phenomenon turns all space into pragmatic space: there are only resource areas to be exploited by industrial activity – coal, iron ore, cotton, etc. - and areas of consumption of industrial products-cities and other factories -, interconnected by distribution lines. The flows that run along these lines have two opposite directions: centripetal flows, which lead nature and culture into machines, and centrifugal flows, where "transformed things and men flow out of machines" (Ibid., pp.40). Human groups settle along these lines, forming places "from which the men are sucked into factories, to then be periodically regurgitated, and spat out again from there. The whole of nature is drawn concentrically by this suction of machinery "(Ibid., pp.40).

It is not surprising, therefore, that many industrialists sought to turn their factories into planned cities, where the corporation would meet all the needs of the inhabitants/workers. This model took up, in a way, the functional logic of monasteries, in which the corporation/religious order provided everything necessary for the daily life of the workers/monks, and these, in return, guaranteed their right to such services through work and obedience to the rule/direction. An example is the village of Saltaire, built by Titus Salt from 1851. The name of the village honors the two most responsible for its existence: The Salt itself and the Aire River, next to which the mill was installed. The place was chosen for its proximity to the river (production), the railway (distribution), and the abundance of wool in the region – strictly pragmatic criteria, as in the case of monasteries. However, the layout of the buildings did not follow any symbolic system. Even its primary symbolic dimension was, in essence, pragmatic: the main facade of the mill was erected facing the railway, functioning as an instrument of propaganda (English Heritage, 2001, p.36). The orthogonal grid of streets had only the role of organizing the buildings, ensuring adequate insulation and ventilation (Figure 3).

AS / Vol 43 / Nº 68 / 2025
ISSN Impresa 0716-2677
ISSN Digital 0719-6466

Until the end of the 19th century, the construction of a building was the product of dialogues between customers, builders, artisans, and suppliers, based on relationships of trust (Davis, 2006, p.66). With the spread of real estate speculation, buildings cease to be built by individuals and are *published* by companies. The future inhabitants are unknown and do not participate in any stage of the design and construction processes – they only choose the house, apartment, or office from the options available on the market, as with the purchase of any industrialized product. The city ceases to be constituted by the sum of the buildings and begins only to "house" them, just as the factory houses the machines or the supermarket houses the products.

A person moves between these buildings, which are placed on plots of land previously designated by the public administration as suitable for their installation. However, while apartments and offices were standardized and sold, the factory retained its specificity due to its technical and functional demands. There cannot be a speculative market for industrial plants and buildings, and therefore, these are still effectively *built*. In homes and offices, although the cooling, sewage, and electricity systems are almost always hidden in the walls, the building as a whole *works* like a mechanism, a gear or mill wheel, that moves in the rhythm of industry, the same that ends up governing the city and human life in general. Man is sheltered as a resource, a kind of machine that, unfortunately, needs to inhabit. Following Flusserian terminology, we can call the inhabitants of these published – and no longer truly built – buildings, *employees*. At first glance, we may be led to believe that employees will be the protagonists of the post-industrial era, but this protagonism is only superficial. Although the office – the main workspace of the employee- seems to be more " human" than the factory, which after all was conceived primarily to house machines and only secondarily the operators still needed, the true protagonist of the post-industrial – and, according to Flusser, post-historical- world is, in fact, the device in function of which employees exist and operate: or rather, in function of *work*.

POST-INDUSTRIAL ERA: METHODOLOGY, TECHNICAL WORK, PROGRAMMED ARCHITECTURE

The most characteristic typology of the post-industrial era is no longer the factory, the space of production, but the office, the space of administration (Figure 4). For much of the 19th century, administrative employees occupied an intermediate social position, working side by side with businessmen in small offices. However, from the 1860s, office buildings built mainly for rental purposes began to be erected. One of the best-known examples of this first phase is the Oriel Chambers, in Liverpool (1864), designed by Peter Ellis (King, 2005). The building housed small offices, organized in a modular composition that was also reflected in the structure and its façade –the shape of the ensemble as a whole expressed the industrial logic behind its construction.

AS / Vol 43 / Nº 68 / 2025
ISSN Impresa 0716-2677
ISSN Digital 0719-6466

Figura 4. Washington office, c.1904. Source: Burke, 194.

With the growth of organizations and the intensification of demand for administrative work, this type of office, small and still domestic in appearance, quickly became obsolete. At the same time, the advancement of construction technologies made it possible to break from the restricted module, giving way to large spaces, occupied by rows and more rows of employees bent over tables. In this configuration, very similar to that of factories, the place of the machine was occupied by the table or workstation that, because it was commonly individual, came to be recognized by the employee as his "place", both in the physical space and in the organization. Similarities to industrial work include the control of time and movement, which breaks administrative work down into tasks such as copying documents or filling out orders. Thus, the *mystery* of this work was equally fragmented, making it increasingly difficult to imagine that an employee responsible for filling out a certain number of forms in a timed interval could one day become an entrepreneur. This employee was no longer an apprentice administrator, but only an archivist, a typist, or even a "document filler".

The office houses the desks, the "places "around which employees move and "on" which they spend much of the day. At the desk, the employee lays out his tools, and although all desks and instruments may be the same or very similar, each desk "belongs" to an individual. The presence of the employee *at the* desk, and not only around it, gives it a

AS / Vol 43 / N° 68 / 2025
ISSN Impresa 0716-2677
ISSN Digital 0719-6466

Figure 5. Wooton desk on display at the William Howard Taft National Historic Site. Source: LeMay, 2019.

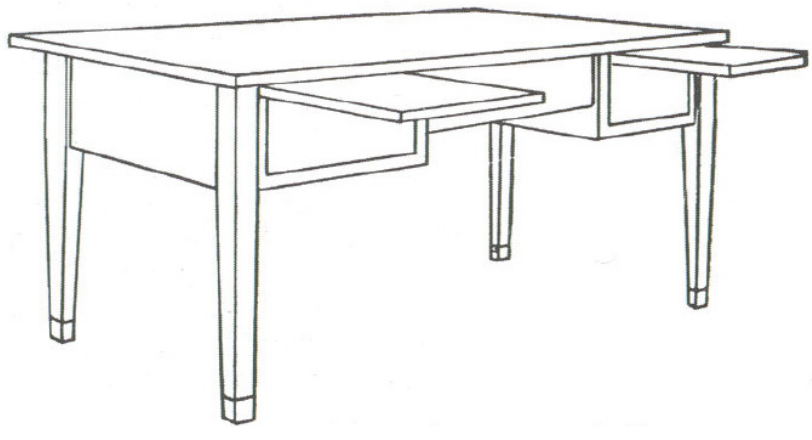

Figure 6. Modern Efficiency Desk. Source: Galloway, 1922, p.89.

AS / Vol 43 / Nº 68 / 2025
ISSN Impresa 0716-2677
ISSN Digital 0719-6466

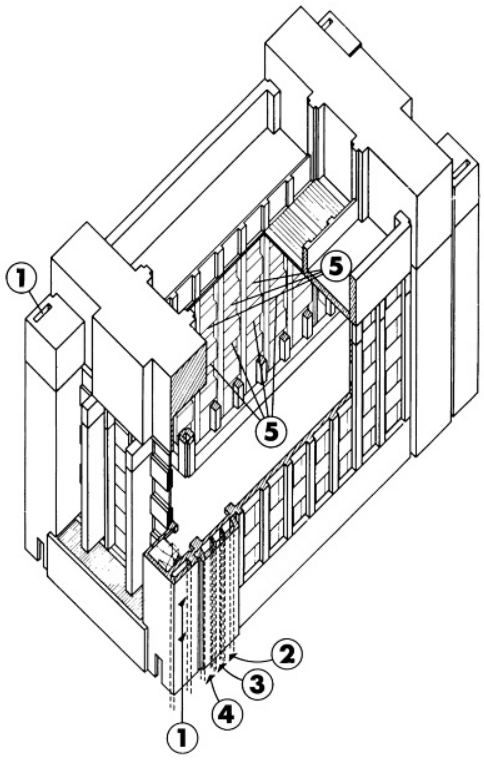

1 - Fresh air intake
2- Distribution of temperate air
3- Polluted and exhausted air
4- Duct for installations
5 - Grills for fresh air outlet

Figure 7. Larkin Building - Air circulation system. Source: Banham, 1969.

purely contextual individuality, almost independent of its shape. Until the beginning of the 20th century, employees who still worked in small offices of a "domestic" nature used desks such as the *Wooton desk* (Figure 5), which had compartments in side flaps that could be closed, transforming it into a piece of furniture that could be perfectly placed in a living room, without looking "out of place". In the newly industrialized office, employees began to work at standardized desks, such as the *Modern Efficiency Desk* (Figure 6), released in 1915. The design of this desk was reduced to the essentials – a top, four feet, and minimal storage space. In addition to reducing costs and facilitating the observation of *supervisors*, this new design made a significant contribution to creating a distinct ambiance for the offices, one that is increasingly separate from the domestic atmosphere.

The pace of growth of some organizations led many of them to build headquarters, such as the Larkin Building, designed by Frank Lloyd Wright in 1906. The building brought all the departments of the Larkin Soap Company under one roof, as well as complementary spaces such as canteens, a gym, and a doctor's office. Although monasteries and industrial cities had already sought to integrate diverse functions, at Larkin, all the rooms were concentrated in a single block, a new typology made possible by the implementation of one of the first air conditioning systems (Figure 7). Wright himself would describe the building as "a simple hermetically sealed brick cliff" (Wright, 1977, p.175).

The interior of the brick enclosure was marked by a large central void, around which all other spaces were arranged. This configuration considered

AS / Vol 43 / Nº 68 / 2025
ISSN Impresa 0716-2677
ISSN Digital 0719-6466

Figure 8. Seagram Building.
Source: Ohyama, 2017.

the functional demand of the air conditioning systems available at the time, and Wright exploited the resulting monumental ceiling height. At the corners of the building, vertical circulations –which also functioned as ventilation ducts- created a continuous spiral flow from the upper floor to the ground floor. This solution also addressed another functional need: the document flow planned by the company's managers. Thus, the building's shape grew directly from the technical and administrative demands of the corporation. According to Banham, it was "a design whose final form was imposed by the environmental control method employed" (Banham, 1969, p.91). However, Wright knew how to simultaneously manipulate both systems –technical and administrative– in favor of his architectural intentions, synthesizing them in the spiral circulation around a large central void. This solution may have served as inspiration for his design of the Guggenheim Museum in New York, developed almost 40 years later.

Although the Larkin Building was relatively small, the logic of its design would be replicated in the skyscrapers of Chicago and New York, which became global models. Until the first half of the 20th century, these towers were lined with eclectic facades, and the interiors of common areas – lobbies, halls, restaurants– followed the same decorative pattern. On the other hand, the office spaces, aimed at the real estate market, were much more straightforward and essentially "pragmatic", allowing maximum

AS / Vol 43 / Nº 68 / 2025
ISSN Impresa 0716-2677
ISSN Digital 0719-6466

adaptation by the rental companies. From the 1950s, this contrast between exterior and interior began to be fought and overcome: the pragmatic logic of the workspace broke through the mass of the facade, dissolving it in glass panes. In the following decades, this typology of skyscrapers spread globally, consolidating the so-called International Style. One of the most famous examples is the Seagram Building (Figure 8), designed by Mies van der Rohe, which opened in New York in 1958. The black glass and steel tower, marked by bronze uprights and erected on a foundation that included a large square, became a paradigm for numerous office buildings built around the world. As Philip Johnson stated, "What makes Mies a great architect is that he is very easy to copy" (Saval, 2014).

A few years earlier, in 1943, Peter Drucker had stated that the company had become the "constituent institution of industrial society" (Donkin, 2003, p.239). By 1960, office workers –many of them housed in buildings modeled after the International Style– already accounted for one-third of the workforce in the U.S. (Saval, 2014). For William Whyte, organizational culture had spread to society as a whole, creating a "generation of bureaucrats" who did not seek to transform the *status quo*, but only adapt to it (Whyte & Saval, 2014). In Flusserian terms, these individuals did not properly desire to *work*; they believed that the world should remain unchanged. Instead, they limited themselves to *function.*

Most of these employees operated devices, such as calculating machines, telex machines, and computers. In one of his most provocative definitions, Flusser states that a device is a "toy that simulates a type of thinking", and a toy is an "object to play with" (Flusser, 2011a, p.11). The employee is therefore a "person who plays with the device and acts on it" (Ibid., p. 12). Their work may seem extremely serious, but it is structured like a game whose rules "emanate" from the toy-device itself. The employee who uses a calculator can only calculate, since that is all the device allows them to do; the same logic applies to those who fill out a performance report or an inventory control sheet. The employee represents a new type of worker who, instead of actually working, only works according to the programs of the devices they use.

Even in the 1960s, large computers began to gain a foothold in offices, automating data processing and rendering many employees obsolete. A few decades later, the personal computer concentrated functions that had previously been spread among various tools, making large desks that house papers, pencils, and calculators redundant. This new office, popularized in the 1980s, grew alongside the so-called reengineering and redistribution of workload among fewer people, as well as the emergence of forms of work made possible by information technologies, such as *teleworking* and the *home office*. These modalities would gain strength in the 1990s and 2000s (Figure 9), reaching their apogee during and immediately after the COVID-19 pandemic. As Donkin noted: "when the tool is also a toy (...), real work needs to be more absorbing, to keep screen workers from spending

AS / Vol 43 / N° 68 / 2025
ISSN Impresa 0716-2677
ISSN Digital 0719-6466

Figure 9. The work desk in 1980 and in 2014. Source: Azzarello (2014).

time on the Internet" (Donkin, 2003, p.302). The increasing mobility of these devices has led Alvin Toffler to state that "we are changing the concept of 'workplace' to that of 'work done anywhere'" (Toffler in Donkin, 2010, p.343). Just as the book would have killed the building, the device could one day kill the office.

Despite Toffler's diagnosis, offices still exist, many of them comprising desks, cubicles, and other types of workstations. In addition, virtually all the devices that threaten its existence have themselves been created or developed in the offices of companies such as Hewlett-Packard, Intel, Apple, and Microsoft. However, in these spaces of technological innovation, the organization of work was, in general, more informal than in the skyscrapers of large cities. Many of these companies have adopted flexible working hours, relaxed dress codes, and started offering leisure areas and socializing events – practices already present in organizations like Larkin, but now associated with an *ethos* of informality. From the 1990s, with the boom of "dot-com companies", this culture intensified to the point of making the transition between university campuses and the corporate environment almost imperceptible (Saval, 2014).

The collapse of the" internet bubble" marked the end of many of these companies, but those that survived consolidated a model inspired by the university campuses: *the suburban office parks*. One of the most celebrated examples is AT&T's Bell Laboratories, often compared to Princeton University's campus. Its creators conceived the space as an environment entirely focused on research, which required a degree of flexibility incompatible with the model of the urban skyscraper. Thus, several blocks interconnected by corridors were designed, allowing for meetings between scientists, researchers, and administrative employees as they moved between laboratories, offices, and recreational areas. Within a few years, the employees of this campus had developed the transistor and the bit (Ibid.). Four decades later, the Googleplex, Google's headquarters in Mountain View, was conceived in a similar configuration (Figure 10). In its internal spaces, an atmosphere of informality predominates, designed to turn offices into "fun" spaces that foster creativity, complemented by gyms, sports courts, and relaxation rooms, among other features. However, despite the distinctive appearance marked

AS / Vol 43 / Nº 68 / 2025
ISSN Impresa 0716-2677
ISSN Digital 0719-6466

Figure 10. Interior of the Googleplex. Source: Chan, 2005.

by unconventional decoration and furniture in corporate environments, it is, in essence, another space in which an organization, be it a religious order, a factory, or a large technology company, seeks to offer its workers everything they may need.

Googleplex provides free food to its employees, who can frequent the cafes and restaurants of the complex at any time of the day or night. Similarly, Google's search engine makes available to any user a seemingly inexhaustible amount of information on virtually any subject. This is a service that is undoubtedly useful, practical, and conveys a semblance of reliability. However, just as the Googleplex employee can only consume what the company puts at their disposal –unless they bring something "from outside"–, the user of the search service finds only what the algorithm presents to them as a result. In both cases, the logic of the Flusserian device is evident. It seems to offer all imaginable possibilities, but in fact, it is limited to a set of previously defined and programmed options. The large number of options helps to disguise the structural, intrinsic, and inescapable limitations of the device. If we want something not provided for in your program, we need to introduce external elements, "from the outside".

Mobility and the increasing multifunctionality of devices have made it possible to perform many types of work almost anywhere, as evidenced during and shortly after the COVID-19 pandemic. For some professionals, this meant the possibility of working without a formal link to a company, a phenomenon that, combined with trends of decentralization and outsourcing, explains the growing number of *freelancers* and *coworking* spaces. However, even though people are increasingly immersed in the universe of devices, cities continue to replicate the rhythm inherited from

CONCLUSIONS

AS / Vol 43 / Nº 68 / 2025
ISSN Impresa 0716-2677
ISSN Digital 0719-6466

the industrial age, characterized by centrifugal and centripetal flows between living spaces and workspaces. The pandemic seemed to disrupt this logic, and although many organizations experimented with hybrid or remote work regimes, the post-industrial logic that reduces the city to a mere space and does not view it as a place was soon re-established. In contrast, information –immaterial or at least invisible- circulates almost unrestrictedly between devices. It is in this tension between the fluidity of information and the rigidity of urban structures that Flusser's thinking proves particularly fruitful for mapping and understanding contemporary contradictions.

On the first pages of *The Last Judgment: Generations I*, Flusser describes the experience of flying over Europe on an airplane, observing medieval cities from a "transcendental point of view" (Flusser, 2017, p.35). On the plane, he was completely isolated not only from the city but also from its immediate context: he did not experience either the speed of its movement or the environment around it. The city "outside" or "down there" was reduced to a picture framed by the window. Such experience was not available to those who conceived, built, and inhabited those cities before the 20th century. Thus, the plane added a new dimension to the experience of a medieval city, impossible to be foreseen by its builders and therefore absent from their "program".

In 1923, Le Corbusier published *For An Architecture*, a collection of essays where he defended his views on modern architecture. In the section entitled "Eyes that do not see", he extolled the mechanical logic of ocean liners, airplanes, and automobiles –products of "imagination and cold reason" (Corbusier, 2020)– that should inspire the architects of his time. For him, the war had been "an insatiable customer", converting the millenary dream of flying into a pragmatic, life-and-death matter. The airplane, which enabled Flusser to contemplate European cities from a transcendental point of view, was also the instrument that allowed for their bombing. Le Corbusier himself explored this new aerial perspective in radical urban projects for cities such as Rio de Janeiro and Montevideo, conceived from the vision obtained by approaching them on airplanes or zeppelins.

The emergence of this aerial perspective had profound theoretical implications: the idea of "seeing things from the outside", as an external observer, was disseminated, which approaches the almost metaphysical point of view generated by the experience of flying. Similarly, the development of digital technologies and their dissemination through the Internet have added unprecedented dimensions to the human experience, profoundly transforming the way people perceive the world and themselves. The builders of the Alhambra could not imagine that centuries later it would be possible to fly over the palace and contemplate it in its entirety while remaining comfortably seated in a controlled and isolated environment. Even more improbable would be to suppose that they could foresee the possibility of carrying out a virtual tour of the palace from

AS / Vol 43 / Nº 68 / 2025
ISSN Impresa 0716-2677
ISSN Digital 0719-6466

anywhere in the world. It is also a new dimension – an additional layer embedded in our experience of the world.

Currently, a simple search can provide information about almost any building, city, or locality. The extent and quality of information may vary, but almost everything that exists in the "real" world also has a virtual presence. In this process, everyone who produces and shares images, texts, and videos acts, to some extent, as employees who feed a large device – the World Wide Web of information. Some initiatives even seek to use this data to manage cities. As Emily Badger notes in an article published in *The New York Times*, "many have become enamored with the same idea": that the same actors responsible for designing circuits and social networks could also conceive cities. The reflection culminates in a provocative question: "What if the people who build circuits and social networks could build cities, too?"(Badger, 2018)**2**. The logic behind such a hypothesis is clear: if we have already resorted to devices to work, have fun, and solve countless practical problems, why not assume that those who created these solutions could also face the challenges that afflict our cities?

The assumption that the logics that govern our devices could also make cities work better leads to an inevitable analogy: the city as a device, or as an object, or a *gadget*. The modern concept bears a striking resemblance to that advocated by modern architects and urbanists, such as Le Corbusier, about a century ago: cities planned rationally, following the pragmatic logic of machines, would shape society in the image of the modern and industrialized world. However, even the rare cities designed according to these principles turned out to be something quite distinct from what was predicted. They do not work "as well as machines", but perhaps it is precisely this imperfection that makes it possible to characterize them as cities.

One of the most emblematic examples is Brasilia. Both Marshall Berman's report (2007) and James Holston's ethnographic analysis (1989) contrast the organizational clarity of the urban plan, perceptible from the transcendental perspective of the aerial view, with the direct experience of the space at ground level. Both demonstrate how the Brazilian capital has evolved into something vastly different from the efficient and fully functional bureaucratic metropolis envisioned by Brazilian urbanists and politicians in the late 1950s. Designed by Lúcio Costa in line with several principles formulated by Le Corbusier, Brasília was conceived "from above". For Holston, the project represented an imagined and desired future that implied the denial of the social and cultural conditions prevailing in Brazil at the time. This "purposeful inadequacy" constituted the very premise of the project: the city should be an instrument of transformation, capable of promoting this idealized future from –and despite– the existing conditions (Holston, 1989, p.5). However, instead of being entirely transformed by the new capital, these conditions ended up, in practice, transforming the city into something that escaped the original project.

2 Original quotel: *many have become enamored with the same idea: What if the people who build circuits and social networks could build cities, too.* Tradução do autor.

AS / Vol 43 / Nº 68 / 2025
ISSN Impresa 0716-2677
ISSN Digital 0719-6466

The word *plan* highlights the main difference between the modern mentality that created Brasilia and the contemporary logic that guides many initiatives linked to the concept of *Smart Cities*. Brasilia was a plan, both in the sense of design and project, designed to transform the functioning of Brazilian society. Its idealizers placed such confidence in the power of urban structures that they believed the control exercised by architects and urbanists during the design phase was sufficient: it was assumed that modernity would inevitably shape modern men. However, the fact that the occupation and growth of Brasilia did not follow the original plan –evidenced by the disorderly expansion of satellite cities, which formed a vast periphery marked by serious urban and social problems- demonstrated that controlling only the "shape" of the city is not enough.

If the goal is for the city to function as planned, it is not enough to design roads; one must also program the cars. By understanding the city as a program –and no longer as a machine, as in the modernist ideology– planning and control extend beyond conception, reaching the daily functioning of urban space. The program is dimensionless, focused mainly on processes and not on material objects ("things") such as buildings, roads, or viaducts. It cannot be simply drawn or planned, but only programmed. In the programmed city, there is more control, which can result in greater efficiency, but also inevitably, less freedom. An autonomous vehicle, for example, can only travel routes provided for in its program – there is no room for a "wrong" turn or for crossing an open field. In addition, each displacement is not only programmed, but also recorded and stored. The urban program feeds off this continuous stream of data to keep the city running. Thus, the program needs to know the displacements, origins, and destinations of each individual. Unlike what happened in Brasilia and in other neighborhoods or housing complexes planned according to modernist parameters, confronting, subverting, or adapting a program is much more difficult.

The new layers created by machines –like airplanes– and by devices – computers, smartphones, and the like– have significantly expanded our range of vision and control over reality. The opacity of these devices is often tolerated, or even "welcomed," because we trust their "judgment": we no longer need to see what they see. The external observer, displaced from the field of phenomena to an almost divine position, can now allow themselves some "blind spots". In this context, many advocates of smart cities believe that the dialogue between devices will enable an efficient, fluid, and infallible infrastructure, where human life will flourish, spared from everyday worries about traffic, climate, or service management. Sensors, computers, autonomous vehicles, and the massive processing of data (big data) would form a self-regulating urban organism, fed by the energy and information that it generates and manages itself. Just as machines promised to free humans from manual labor to devote themselves to intellect and leisure, smart cities propose to free their inhabitants from the task of "caring" for them – managing, operating, cleaning, maintaining, restoring. However, would a city that "works" and that, therefore, no longer needs to be effectively administered or governed, still really be a city?

AS / Vol 43 / Nº 68 / 2025
ISSN Impresa 0716-2677
ISSN Digital 0719-6466

Faith in rational planning has given way to faith in algorithms. However, the programmatic mindset can be as utopian as the one centered on planning that emerged in the early 20th century. Modern urbanism aimed to create cities that worked like machines: rational, efficient, reliable. They would then rise from their concrete and steel bodies toward the mathematical perfection of the sciences. The programmatic mindset, on the other hand, seems to invert the vector: it would now be the algorithms, coming from a dimensionless and immaterial domain, that would descend on our cities, impregnating them with their mathematical rationality. However, the idea of a literally "smart" city – or a "spatialized intelligence," as Picon (2015) suggests – is certainly problematic if we consider both the intrinsic opacity of devices and the risk of delegating political decisions to mute dialogues between automated systems.

In any case, it is important to recognize a rather obvious fact: many cities around the world survived the rational plans of the modernists and, most likely, will also survive the effects of the spread of the programmatic mindset. The very essence of cities –as webs of meaningful places that sustain human ties– cannot be reduced to a plan or a program. The danger of the notion of the city as a program lies precisely in the denial of this dynamic and existential nature of urban life. The program tends to reduce or deny the freedom necessary for engagement in risky and unpredictable human relationships, which may be problematic but constitute the essence, the vital core of cities. The desire to delegate to machines and algorithms the decisions on the management of the city can, in this sense, hide the intention – or the effect – of establishing an apolitical *Polis*. Without the kind of critical research proposed in this article, there is a risk of unquestioningly advancing towards the aggravation of the tension between the apparent efficiency of the devices and the political and social dilemmas inherent in life in cities. Such a movement can result in the unconscious and uncritical assimilation of the logic of the device, transforming the city –and architecture as a whole– into mere functional spaces, rather than places where we can, in fact, live.

CONTRIBUTIONS OF THE AUTHORS CRediT

Conceptualization, F. L., R. B.; Data curation; Formal analysis, F. L., R. B.; Acquisition of funding; Research, F. L., R. B.; Methodology, F. L., R. B.; Project Management, R. B.; Resources, R. B.; Software; Supervision, R. B.; Validation, R. B.; Visualization; Writing-original draft, F. L.; Writing-revision and editing, F. L.

BIBLIOGRAPHY

Azzarello, N. (30 de Setembro de 2014). Harvard innovation lab visualizes the evolution of the desk. Designboom. https://www.designboom.com/technology/evolution-desk-harvard-innovation-lab-09-30-2014/

Badger, E. (24 de fevereiro de 2018). *"Tech Envisions the Ultimate Start-Up: An Entire City."* The New York Times. https://www.nytimes.com/2018/02/24/upshot/tech-envisions-the-ultimate-start-up-an-entire-city.html

Banham, R. (1969). *The Architecture of the Well-Tempered Environment*. ELSEVIER. https://doi.org/10.1016/C2013-0-04659-2

AS / Vol 43 / Nº 68 / 2025
ISSN Impresa 0716-2677
ISSN Digital 0719-6466

Berman, M. (2007). *Tudo que é sólido desmancha no ar. A aventure da modernidade*. Editora Schwarcz Ltda

Burckhardt, T. (2004). *A Arte Sagrada no Oriente e no Ocidente: Princípios e Métodos*. Attar Editorial.

Burke, H.E. (1946). *My Recollections of the First Years in Forest Entomology*. Berkeley, California. https://www.fs.usda.gov/sites/default/files/recollections-on-forest-entomology.pdf

Chan, B. (2005). Fotoworks, Workplace. Clive Wilkinson Architcts. https://clivewilkinson.com/portfolio_page/google-headquarters/

Dale, J. e Bradford, C. (1853). Wikimedia Commons. Domínio Público. https://commons.wikimedia.org/wiki/File:Salts_Mill,_drawing.jpg

Davis, H. (2006). *The Culture of Building*. Oxford University Press USA.

Donkin, R. (2003). *Sangue, Suor e Lágrimas: A Evolução do Trabalho*. Editorial M. Books.

Donkin, R. (2010). *The History of Work*. Palgrave Macmillan.

Duby, G. e Aries, P. (Ed.) (1988). *A History of Private Life: Revelations of The Medieval World*. Belknap Press of Harvard University Press.

English Heritage. (2001). *Nomination of Saltaire Village for Inclusion in the World Heritage List*. Bradford, West Yorkshire.

Flusser, V. (1998). "Para além das máquinas" in Bernardo, G., Rouanet, M. G., Giucci, G., Jobim, J. L. e Lacerda, N. G. (Orgs.). *Literatura e sistemas culturais* (pp. 9-18). EdUERJ.

Flusser, V. (2007). *O Mundo Codificado*. Cosac & Naify.

Flusser, V. (2008). *O Universo das Imagens Técnicas: elogio da Superficialidade*. Annablume. https://doi.org/10.14195/978-989-26-1129-7

Flusser, V. (2011a). *Filosofia da Caixa Preta – Ensaios para uma futura filosofia da fotografia*. Annablume. https://cultureinjection.wordpress.com/wp-content/uploads/2018/12/FLUSSER-Vil%C3%A9m-Filosofia-da-caixa-preta.pdf

Flusser, V. (2011b). *Pós-História: vinte Instantâneos e um modo de usar*. Annablume.

Flusser, V. (2012). No além das máquinas – um texto inédito de Flusser. *IHU Revista do Instituto Humanitas Unisinos,* (399), 19-22. https://www.ihuonline.unisinos.br//media/pdf/IHUOnlineEdicao399.pdf

Flusser, V. (2017). *O último Juízo: Gerações 1 (Culpa & Maldição)* e *2 (Castigo & Penitência)*. É Realizações.

Galloway, L. (1922). *Office Management. Its Principles and Practice*. The Ronald Press Company. https://dn790009.ca.archive.org/0/items/officemanagement00gall/officemanagement00gall.pdf

Goldberger, P. (2009). *Why Architecture Matters*. Yale University Press.

AS / Vol 43 / Nº 68 / 2025
ISSN Impresa 0716-2677
ISSN Digital 0719-6466

Guillaumot, E. (2005). Wikimedia Commons. Domínio Público. https://commons.wikimedia.org/wiki/File:Plan.abbaye.Saint.Gall.png

Hani, J. (1981). *O Simbolismo do Templo Cristão*. Edições 70.

Holston, J. (1989). *The Modernist City: An Anthropological Critique of Brasilia*. University of Chicago Press.

Hugo, V. (2013). *O Corcunda de Notre Dame, edição comentada e ilustrada*. Jorge Zahar Editor.

King, A. D. (Ed.) (2005). *Buildings and Society: Essays on the Social Development of the Built Environment*. Taylor and Francis e-library. https://doi.org/10.4324/9780203480755

Kostof, S. (1995). *A History of Architecture: Settings and Rituals*. Oxford University Press. https://archive.org/details/AHistoryOfArchitectureSettingsAndRituals

Corbusier, L. (2020). *Por Uma Arquitetura*. Perspectiva Publishing Ltd.

LeMay, W. (2019). Alphonso and Louise Taft Bedroom, William Howard Taft National Historic Site, Mount Auburn, Cincinnati, OH. Wikimedia Commons. https://www.flickr.com/photos/warrenlemay/33154286518/

Ohyama, K. (2017). Seagram Building. Wikimedia Commons. https://www.flickr.com/photos/ken_ohyama/35098307116/

Picon, A. (2015). *Smart Cities: A Spatialised Intelligence*. John Wiley & Sons.

Rüdiger, F. (2014). *Martin Heidegger e a Questão da Técnica: Prospectos Acerca do Futuro do Homem*. Editora Sulina.

Saval, N. (2014). *Cubed: A Secret History of the Workplace*. Doubleday.

Soto Calderón, A. (2023). Vilém Flusser: imágenes improbables. *Artnodes,* (31), 1-8. https://doi.org/10.7238/artnodes.v0i31.402867

Strutt, J. (1819). Scan from 1819 Rees' Cyclopedia. Wikimedia Commons. https://commons.wikimedia.org/wiki/File:Jedediah_Strutt,_North_Mill_at_Belper,_Derbyshire._Rees%E2%80%99_Cyclopedia,_1819.jpg

Stoddard, W. S. (1972). *Art & Architecture in Medieval France: Medieval Architecture, Sculpture, Stained Glass, Manuscripts, the Art of the Church Treasuries*. Westview Press / Harper and Row

Tuan, Y.-F. (2013). *Espaço e Lugar: A Perspectiva da Experiência*. DIFEL Editorial S.A. https://fundacc.sp.gov.br/wp-content/uploads/2021/04/Espaco-e-lugar-a-perspectiva-da-experiencia-YI-FU-TUAN.pdf

Vietta, S. (1993). *Heidegger – Critique du Nartional-Socialisme et La Technique*. Editions Pardès.

Wright, F. L. (1977). *Frank Lloyd Wright: An Autobiography*. Horizon Press.

Wright, F. L. (1992). The Art and Craft of The Machine in Pfeiffer, B. B., Frank Lloyd Wright Collected Writings (Vol. 1, pp. 1894-1930). Rizzoli.